PiMX8MP IO Board Rev 0.1

26.04.2026
Status: R&D

Designed at Open Visions Technology - OV Tech GmbH
Mail to: info(at)open-visions(dot)com
LinkedIn: https://www.linkedin.com/company/ov-tech-gmbh
Web: http://www.open-visions.com/

Top Level Document

Disclaimer:
All project documents, including schematics and PCB layouts, are provided for informational purposes only. They have not been fully tested or validated and may contain errors or require modifications. Use at your own risk. No guarantees or warranties are provided.

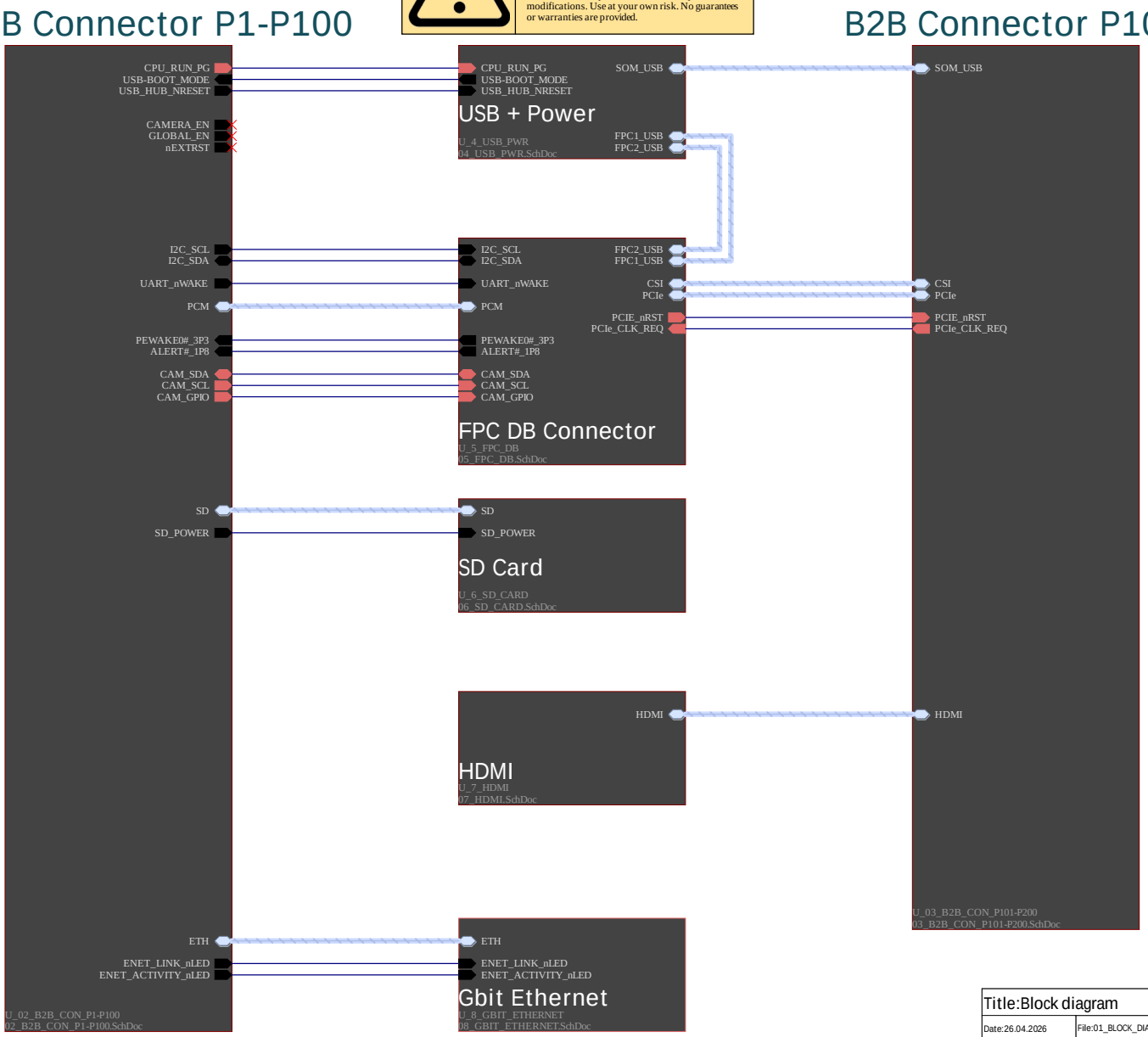

Board edge spacer

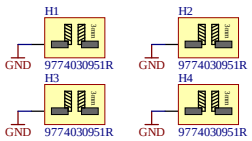

Signal Level Indication

Border Color = 1.8V | Border Color = 3.3V | Border Color = Don´t care

Title:Block diagram		
Date:26.04.2026	File:01_BLOCK_DIAGRAM.SchDoc	Revision: Rev. 0.1
Author:T. Ludemann	Checked by:	Status: RnD
License:CERN-OHL-S-2.0	Project: PiMX8MIO_release.PrjPcb	
OV Tech GmbH - Open Visions Technology	Sheet: 1/8	Size: DINA3

B2B Connector P1-P100

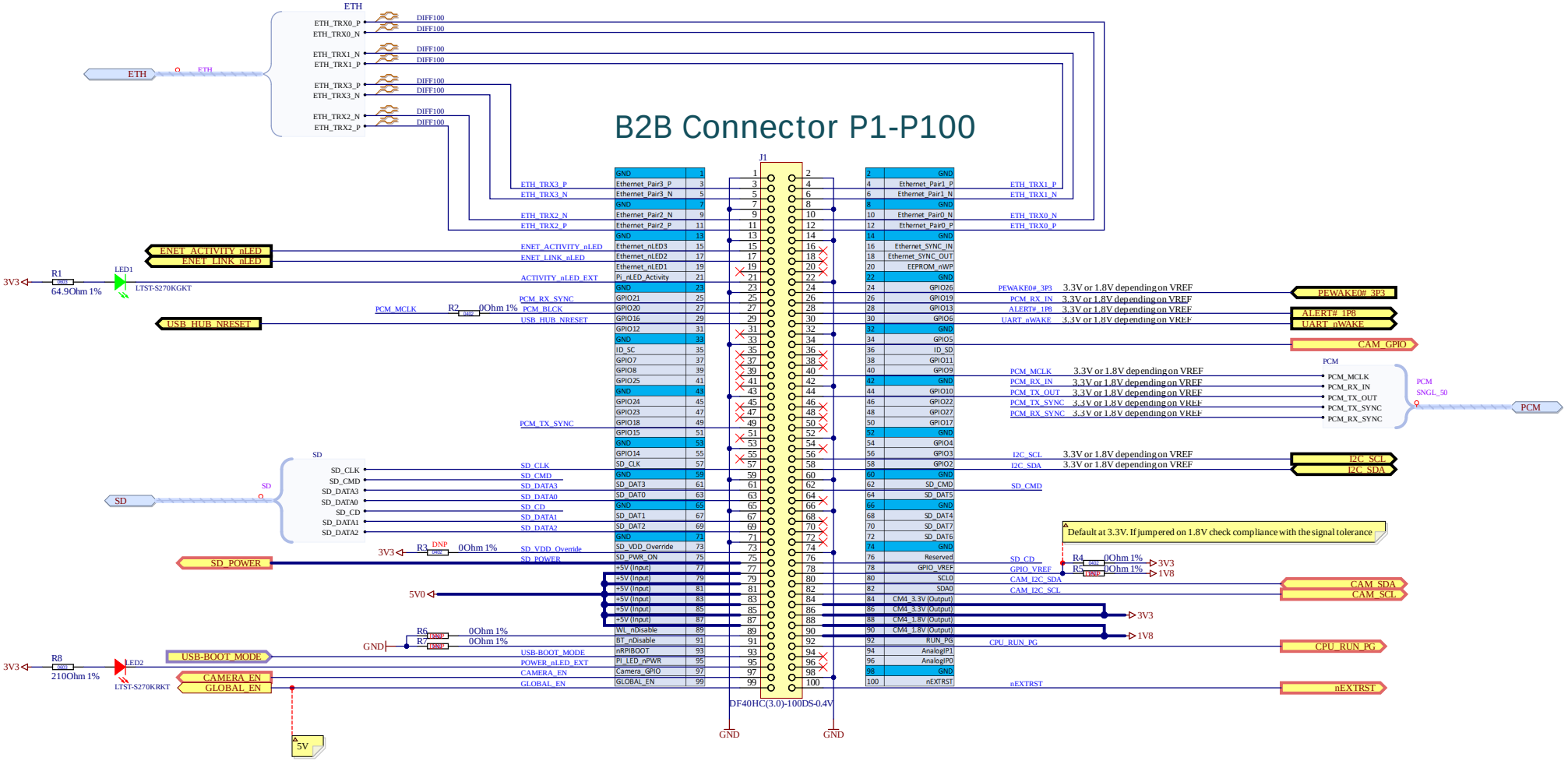

Signal Level Indication

Border Color = 1.8V | Border Color = 3.3V | Border Color = Don´t care

Title: PiMX8MP Board to board connector P1 - P100		
Date: 26.04.2026	File: 02_B2B_CON_P1-P100.SchDoc	Revision: Rev. 0.1
Author: T. Ludemann	Checked by:	Status: RnD
License: CERN-OHL-S-2.0	Project: PiMX8MIO_release.PrjPcb	
OV Tech GmbH - Open Visions Technology	Sheet: 2/8	Size: DINA3

B2B Connector P100-P200

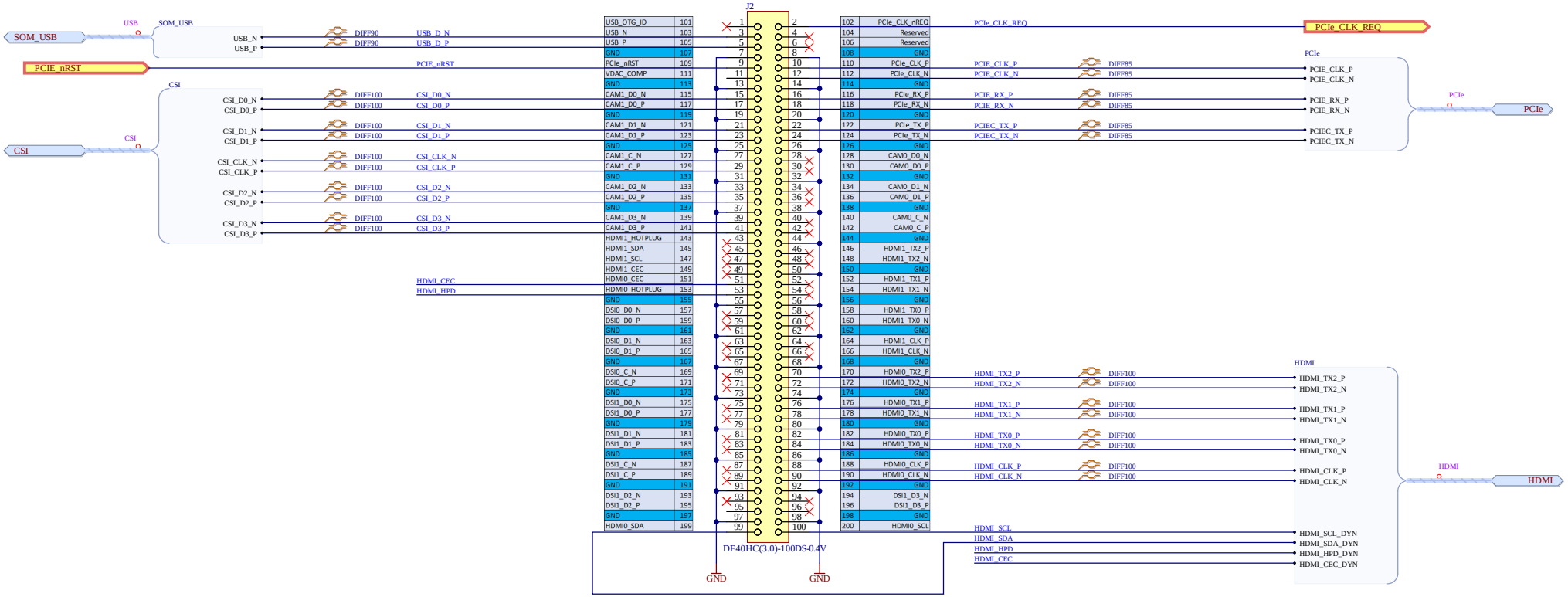

Signal Level Indication

Border Color = 1.8V Border Color = 3.3V Border Color = Don´t care

Title:PiMX8MP Board to board connector P100 - P200		
Date:26.04.2026	File:03_B2B_CON_P101-P200.SchDoc	Revision: Rev. 0.1
Author:T. Ludemann	Checked by:	Status: RnD
License:CERN-OHL-S-2.0	Project: PiMX8MIO_release.PrjPcb	
OV Tech GmbH - Open Visions Technology	Sheet: 3/8	Size: DINA3

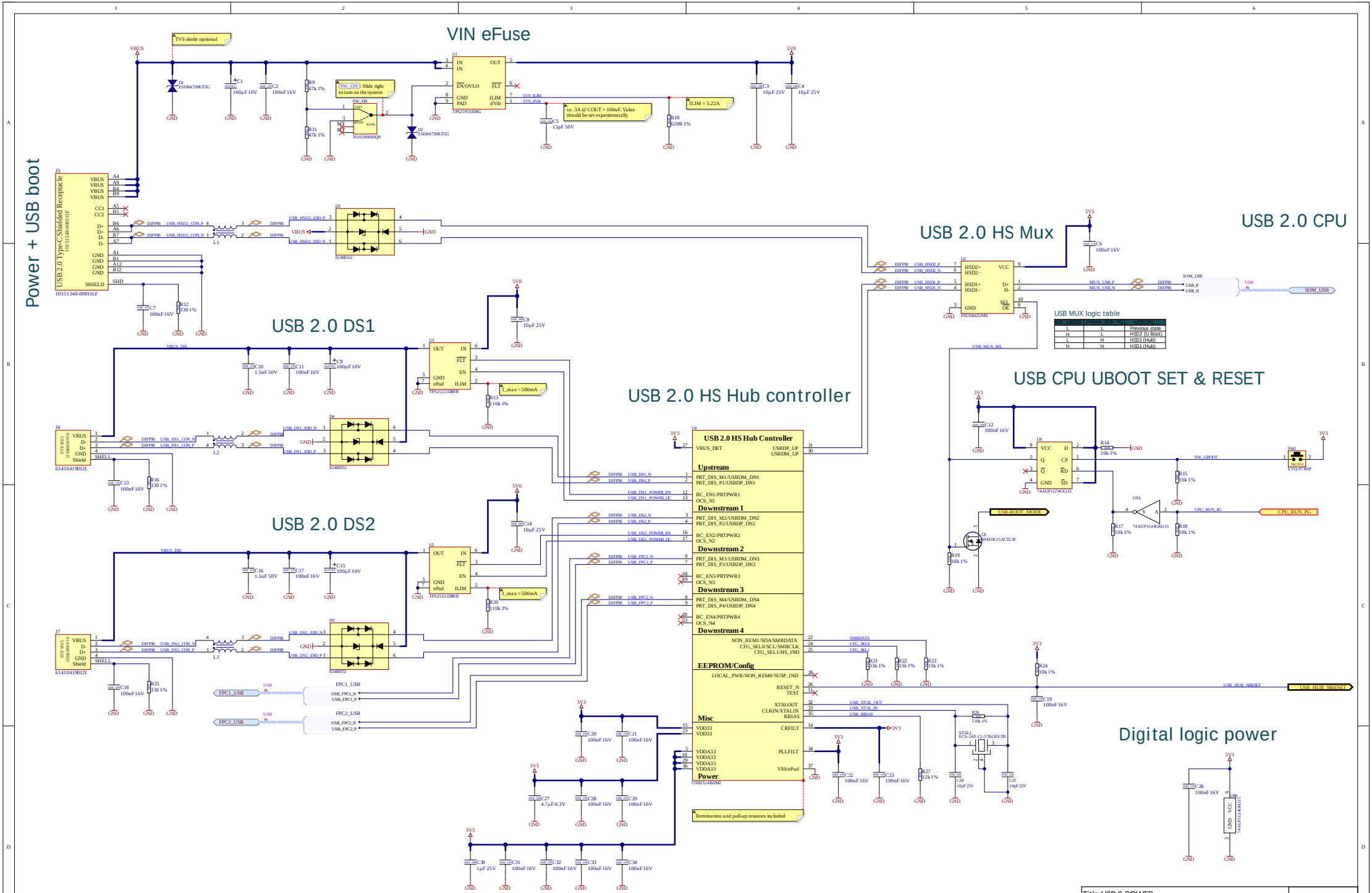
Power + USB boot
VIN eFuse
USB 2.0 DS1
USB 2.0 DS2
USB 2.0 HS Hub controller
USB 2.0 HS Mux
USB 2.0 CPU
USB CPU UBOOT SET & RESET
Digital logic power
USB 2.0 HS Hub Controller
Upstream
Downstream 1
Downstream 2
Downstream 3
Downstream 4
EEPROM/Config
Misc
Power
USB MUX logic table
Signal Level Indication
Border Color = 1.8V
Border Color = 3.3V
Border Color = Don´t care
Title:USB & POWER
Date:26.04.2026
Revision: Rev. 0.1
Author:T. Ludemann
Checked by:
Status: RnD
License:CERN-OHL-S-2.0
Project: PiMX8MIO_release.PrjPcb
OV Tech GmbH - Open Visions Technology
Sheet: 4/8
Size: DINA2

FPC Daughterboard connector

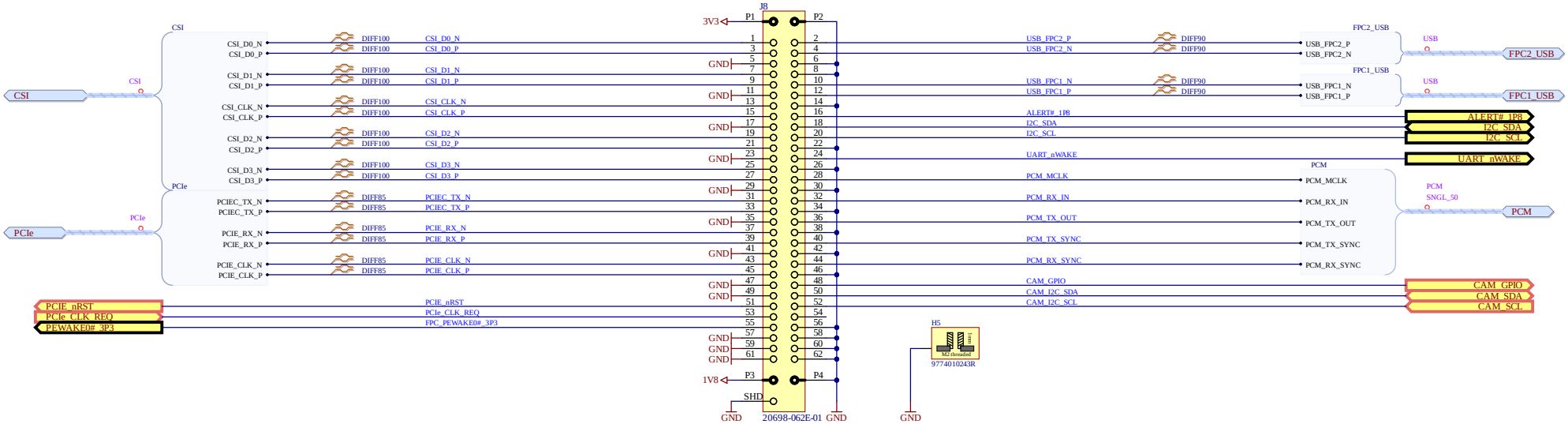

Signal Level Indication

Border Color = 1.8V Border Color = 3.3V Border Color = Don´t care

Title:FPC Connector		
Date:26.04.2026	File:05_FPC_DB.SchDoc	Revision: Rev. 0.1
Author:T. Ludemann	Checked by:	Status: RnD
License:CERN-OHL-S-2.0	Project: PiMX8MIO_release.PrjPcb	
OV Tech GmbH - Open Visions Technology	Sheet: 5/8	Size: DINA3

SDIO 3.0

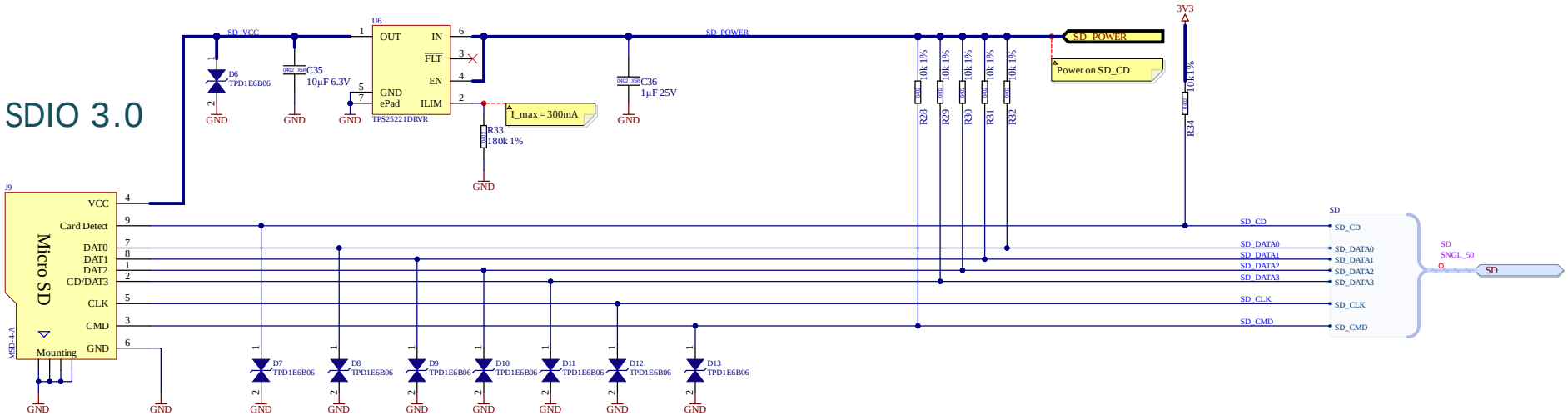

Signal Level Indication

Border Color = 1.8V Border Color = 3.3V Border Color = Don´t care

Title:SD Card		
Date:26.04.2026	File:06_SD_CARD.SchDoc	Revision: Rev. 0.1
Author:T. Ludemann	Checked by:	Status: RnD
License:CERN-OHL-S-2.0	Project: PiMX8MIO_release.PrjPcb	
OV Tech GmbH - Open Visions Technology	Sheet: 6/8	Size: DINA3

HDMI 2.0a

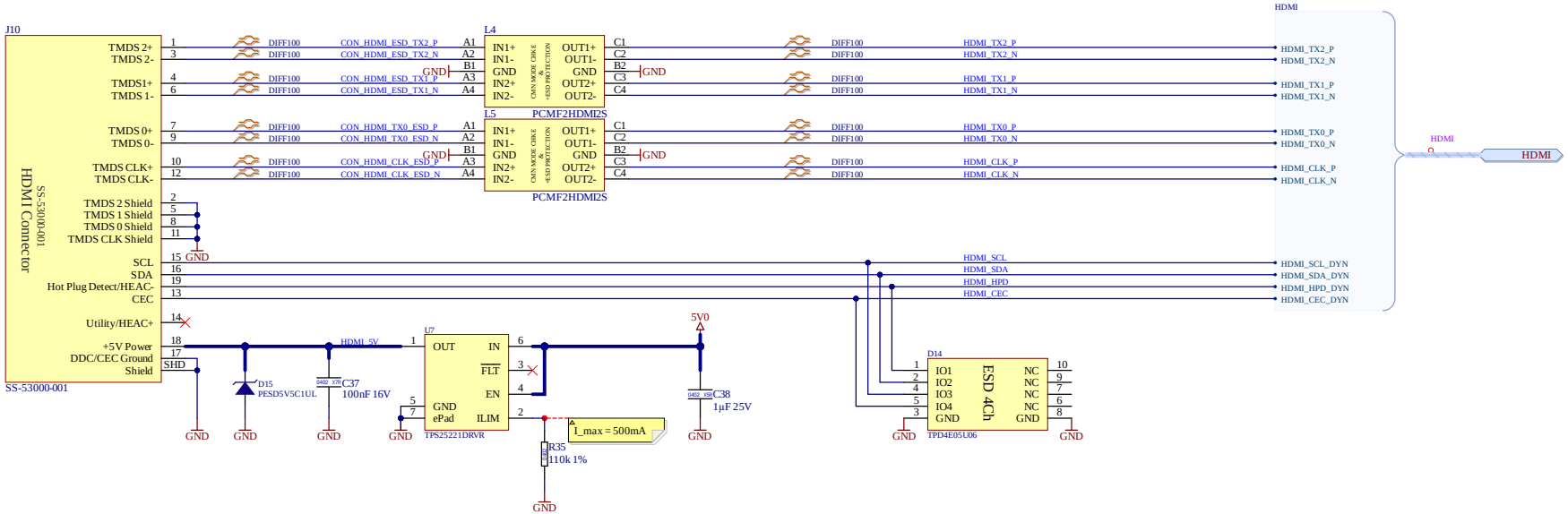

Signal Level Indication

Border Color = 1.8V Border Color = 3.3V Border Color = Don´t care

Title:HMDI		
Date:26.04.2026	File:07_HDMI.SchDoc	Revision: Rev. 0.1
Author:T. Ludemann	Checked by:	Status: RnD
License:CERN-OHL-S-2.0	Project: PiMX8MIO_release.PrjPcb	
OV Tech GmbH - Open Visions Technology	Sheet: 7/8	Size: DINA3

Gbit Ethernet MagJack

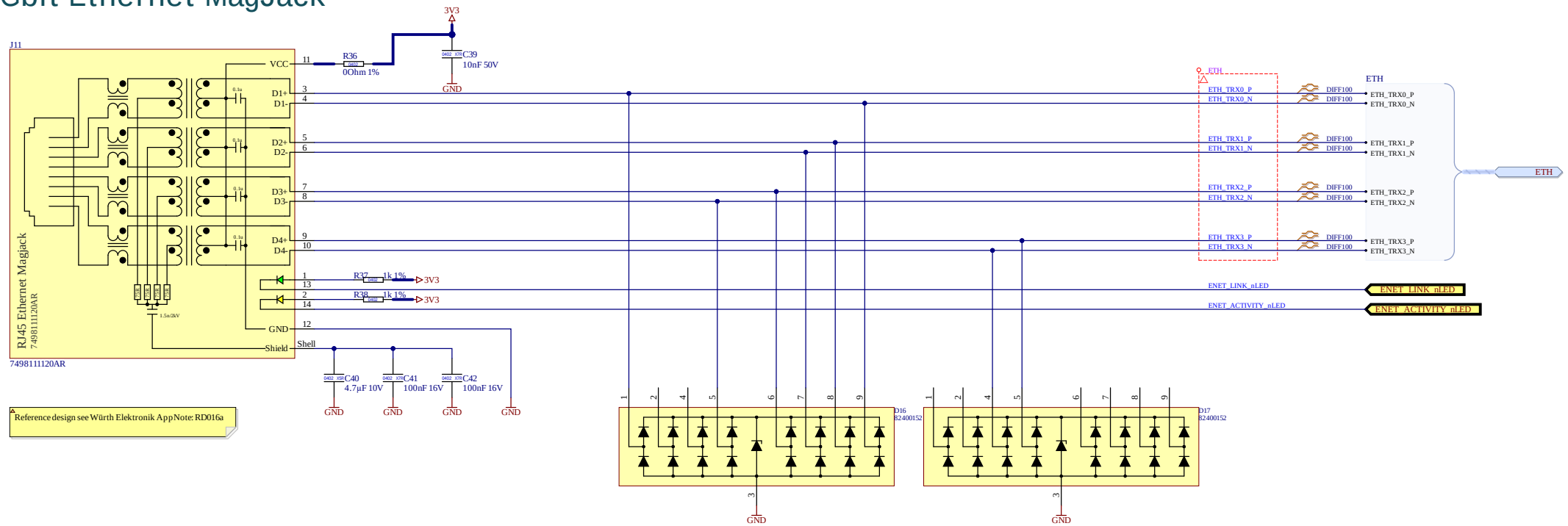

Reference design see Würth Elektronik AppNote: RD016a

Signal Level Indication

Border Color = 1.8V | Border Color = 3.3V | Border Color = Don´t care

Title:Gigabit Ethernet		
Date:26.04.2026	File:08_GBIT_ETHERNET.SchDoc	Revision: Rev. 0.1
Author:T. Ludemann	Checked by:	Status: RnD
License:CERN-OHL-S-2.0	Project: PiMX8MIO_release.PrjPcb	
OV Tech GmbH - Open Visions Technology	Sheet: 8/8	Size: DINA3